NOTES:

1. ALL PARTS, MATERIALS AND PROCESSES SHALL COMPLY WITH HACH'S RESTRICTED MATERIALS SUPPLIER SPECIFICATION DOCUMENT, HACH P/N 8600000.

REVISION			
REV	DESCRIPTION	ECO #	DATE
C	RELEASED PER ECO	C132512	5/23/2023

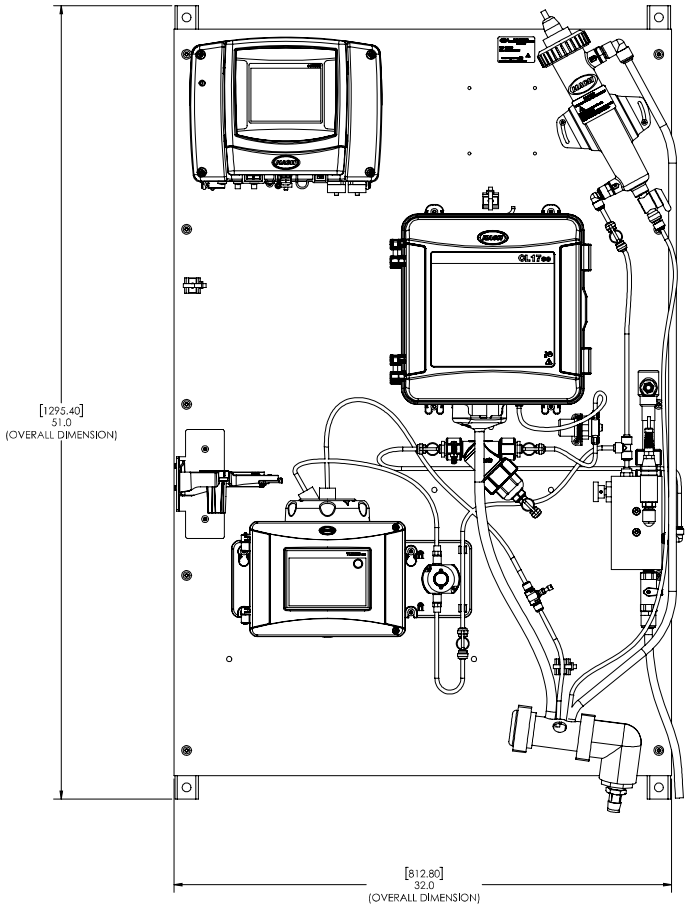

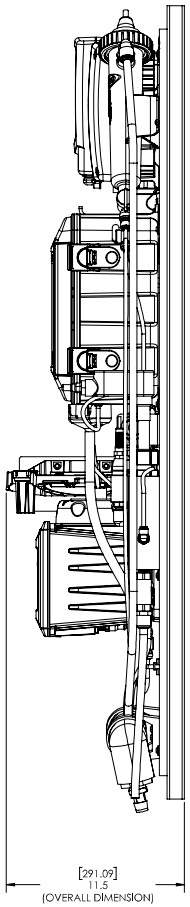

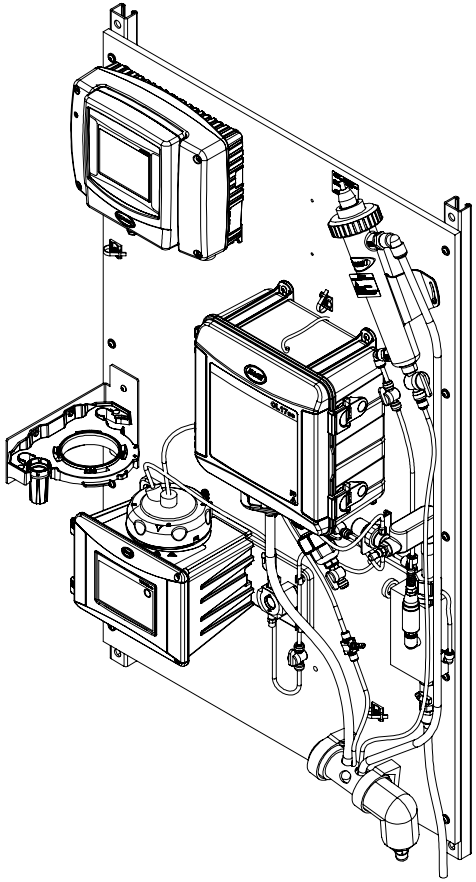

PART CLASSIFICATION	THE SOLID CAD FILE IS THE CONTROLLING AUTHORITY FOR ALL DIMENSIONS		NAME	DATE
MINOR B	UNLESS OTHERWISE SPECIFIED:	ENGINEER	P. SHETTY	06/20/2019
MATERIAL:	DIMENSIONS ARE IN INCHES [MM]	DRAWN	S.BHAVI	3/8/2018
HACH MATERIAL PART NUMBER	TOLERANCES: X ± 0.03 X.X ± 0.01 X.XX ± 0.005 ANGLES ± 1°	CHECKED	Not Checked	
NOTICE: HACH COMPANY CLAIMS PROPRIETARY RIGHTS IN INFORMATION DISCLOSED ON THIS DRAWING. IT IS LOANED FOR MUTUAL ASSISTANCE AND MAY BE RETURNED AT ANY TIME. IT MAY NOT BE DUPLICATED, IN WHOLE OR IN PART, OR USED TO MANUFACTURE ANYTHING, WHETHER OR NOT SHOWN HEREON, REPRODUCED OR DISCLOSED TO ANYONE WITHOUT DIRECT PERMISSION FROM HACH COMPANY.	ALL VENDOR PART NUMBERS END WITH DASHES FOLLOWED BY TWO DIGITS.	PRODUCT MGR	Benjamin Sattler	5/23/2023
			INTERPRET GEOMETRIC TOLERANCING PER: ASME Y14.5M-1994	
			THIRD ANGLE PROJECTION	
			DO NOT SCALE DRAWING	

HACH COMPANY
5600 LINDBERGH DR.
LOVELAND, CO. 80538

TITLE: WDMP - SIX SENSORS ; TU5300sc W/O ACM & CL17sc

SIZE	DWG. NO.	REV
D	8866800	C

SCALE: 1:4 | SHEET 1 OF 2